Y-915 INCLINE CHEST PRESS

please note: parts didnt demlitioned part and fast eners not listed on the introduction

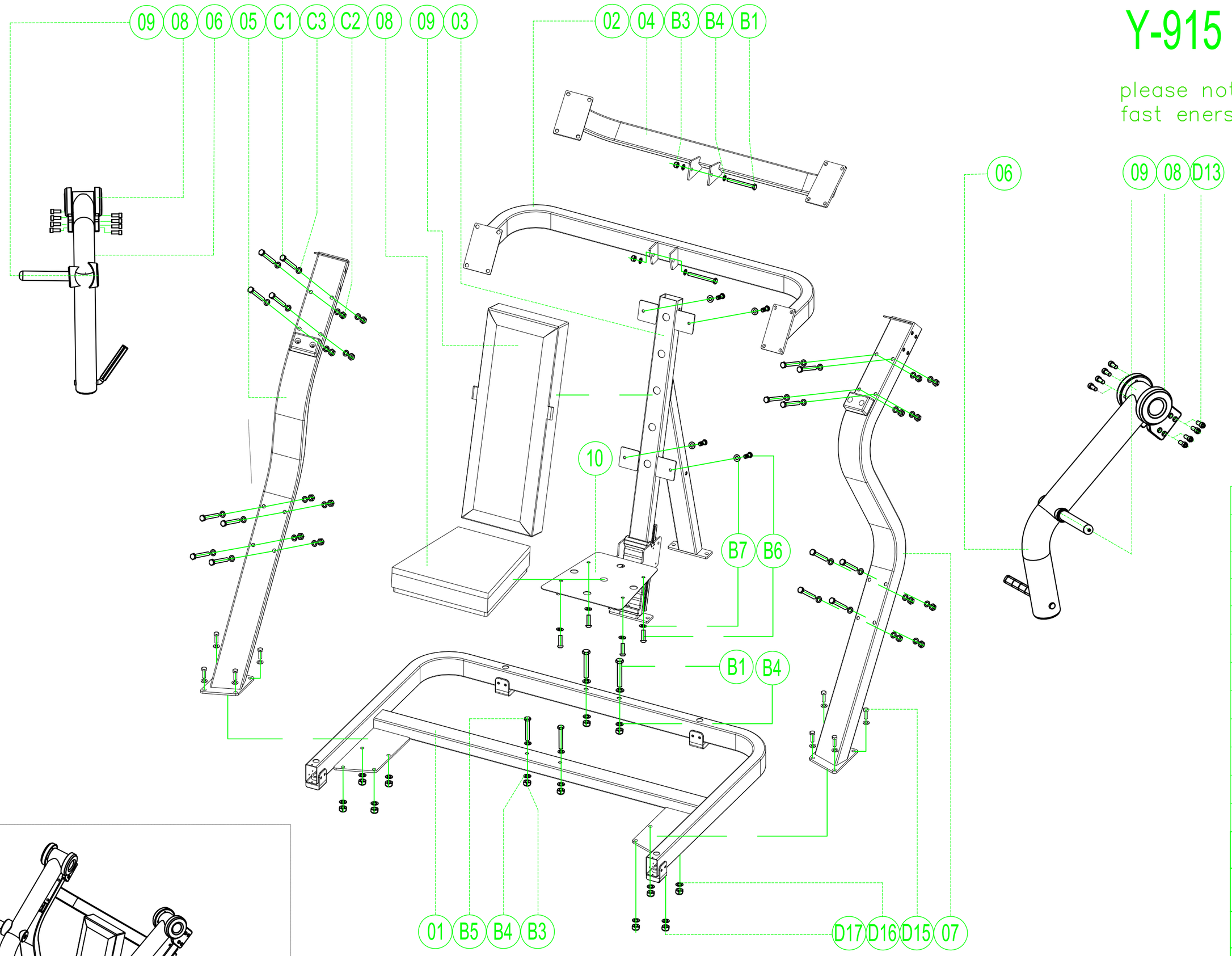

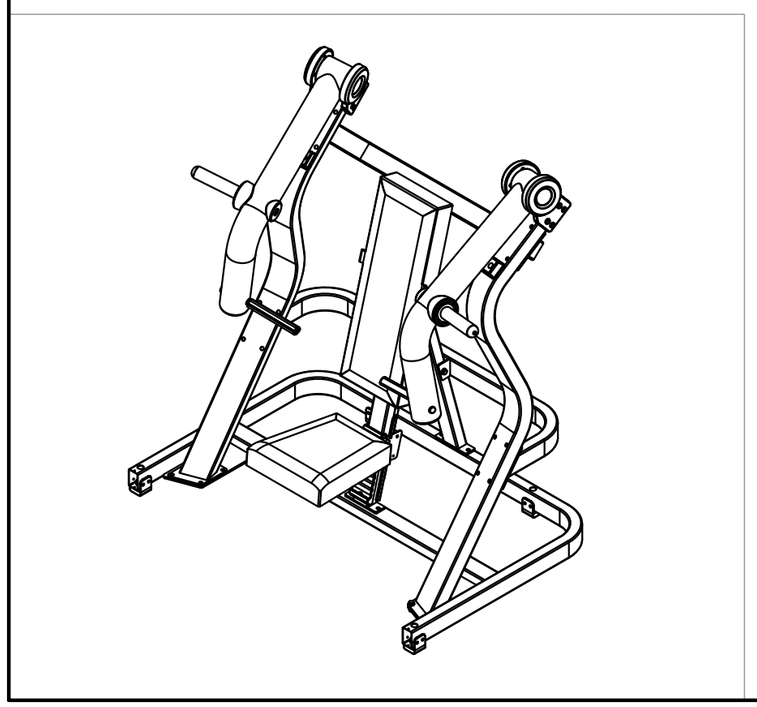

01	CHASSIS GROUP	1
02	INTERMEDIATE REINFORCING GROUP	1
03	BACK CUSHION SUPPORT GROUP	1
04	UPPER CONNECTING GROUP	1
05	RIGHT MAIN FRAME ELBOW	1
06	MOVABLE ARM GROUP	2
07	LEFT MAIN FRAME ELBOW	1
08	BEARING PILLOW	4
09	BARREL BAR GROUP	2
10	CUSHION SUPPORT GROUP	1
11	CUSHION	1
12	BACK CUSHION	1
B7	FLAT GASKET Φ8	8
B6	HALF ROUND HEAD HEX SOCKET SCREWS M8*30	8
B5	HEX SCREWS M12*75	2
B1	HEX SCREWS M12*110	4
D13	HEXAGON SOCKET HEAD CAP SCREWS M12*30	16
D15	HEX SCREWS M12*30	24
B4/C3/D16	FLAT GASKET Φ12	76
B3/C2/D17	SELF-LOCKING NUT M12	30
C1	HEX SCREWS M12*85	16
序号	名称	数量