# Exploded

## E3022 Adductor

please note :prats didn't demolitionde part and fast eners not listde on the introduction

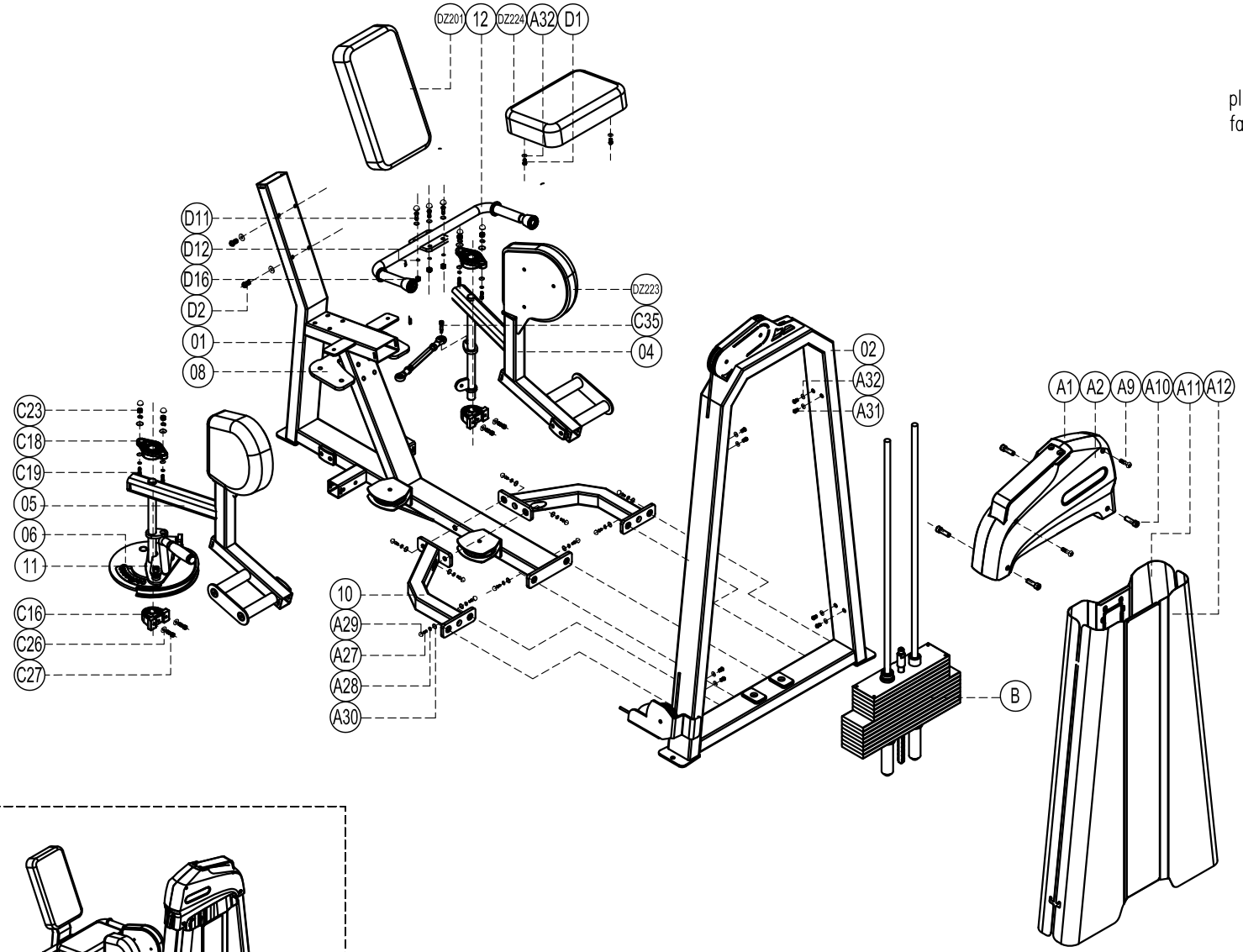


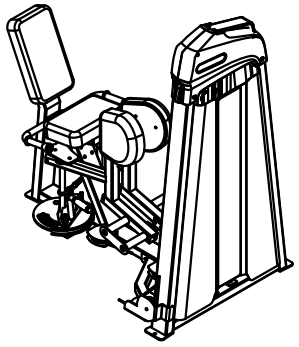

| Number | Name | Quantity |
|---|---|---|
| D16 | Self lock nut M10 | 4 |
| D12 | Flat washer ϕ10 | 4 |
| D11 | Cup head inner hex screw M10*75 | 4 |
| D2 | Cup head inner hex screw M8*80 | 4 |
| D1 | Cup head inner hex screw M8*35 | 2 |

| Number | Name | Quantity |
|---|---|---|
| C35 | Shoulder screw ϕ10*20 | 2 |
| C27 | Socket cap inner hex M10*65 | 4 |
| C26 | Flat washer ϕ10 | 4 |
| C23 | Self lock net M12 | 4 |
| C19 | Socket cap inner hex M12*40 | 4 |
| C18 | Bearing basement FL205 | 2 |
| C16 | Bearing basement PA205 | 2 |
| B | Weight stack set | 1 |
| A32 | Flat washer ϕ8 | 14 |
| A31 | Cup head inner hex screw M8*16 | 8 |
| A30 | Gasket DQ003 | 18 |
| A29 | Screw cap ϕ12 | 18 |
| A28 | Spring screw ϕ12 | 18 |
| A27 | Outer hex screw M12*35 | 10 |
| A12 | Back shroud HB14 | 1 |
| A11 | Front shroud HB18 | 16 |
| A10 | Cup head inner hex screw M6*15 | 8 |
| A9 | Cup head cross tapping screw ST5*16 | 1 |
| A2 | Head cover S907 | 1 |
| A1 | Head cover S908 | 1 |
| DZ223 | Leg pressing set DZ223 | 2 |
| DZ224 | Upholstery DZ224 | 1 |
| DZ201 | Backrest DZ201 | 1 |
| 12 | Handle set | 1 |
| 11 | Selection sets | 1 |
| 10 | Strengthen set | 2 |
| 08 | Rod fix panel | 1 |
| 06 | Cam sets | 1 |
| 05 | Right working arm | 1 |
| 04 | Left working arm | 1 |
| 02 | Door frame | 1 |
| 01 | Main frame | 1 |